MTD062-MB/MTD262-MB
Human body presence sensor

User Manual (V1.6)

Manufacturer:
Zhejiang Oujue Electronic Technology Co., Ltd.

Address: No. 33,Jianxin Road, Furong Town, Industrial Zone,Wenzhou City, Zhejiang Province, China
Tel: +86-15067770797
After-sale Service: John@shojzj.com

Thank you for your support and purchase at we **shojzj**, we are always here for your complete satisfaction, just feel free to share

★ ★ ★ ★ ★

If you have any other need, please do not hesitate to contact us

Copyright Notice

The hardware, software, materials, etc. involved in this document are owned by the company, and the company reserves all rights. The right to modify this document, the products and related copyrights stated in this document belong to the company, and their property rights are absolutely protected by national laws. Without authorization from the company, other companies, units and individuals are not allowed to illegally use and copy.

statement

Please read this statement carefully before using the product described in this document. Once used, it shall be deemed as recognition and acceptance of the contents of this statement.

When using microwave human body micro motion sensing sensors, users must retest according to their own application requirements based on the product characteristics, performance, and functions described in this document to confirm that they meet the user's application needs. The company shall not be liable for any losses or damages caused by improper use.

Due to continuous updates and iterations, the documentation of this product may change without prior notice. Please confirm the updates and errata information through appropriate channels when applying. We apologize for any inconvenience caused and the final interpretation rights belong to the company.

Safety precautions

Safety signs

This manual uses the following safety signs, please be sure to follow them.

Safety signs	explain
	Improper use can cause dangerous situations and may lead to personal injury or death.
	Improper use can cause dangerous situations that may result in personal injury and equipment damage.
	Carefully read and follow the instructions to operate the equipment.

Before starting the operation, please carefully read the operating instructions and precautions to reduce the occurrence of accidents. The "Caution, Caution, Warning, Danger" instructions in the product and user manual do not represent all safety precautions to be followed, but only serve as a supplement to various operational safety precautions. Therefore, personnel responsible for product installation and operation must undergo strict training, master the correct operating methods and various safety precautions of the system before carrying out various equipment operations.

When operating our company's products and equipment, it is necessary to comply with relevant industry safety regulations, strictly follow relevant equipment precautions and special safety instructions.

Electrical safety

This manual covers the installation and use of the BP100-DC human presence sensor.

Please strictly follow all warning signs and operating instructions in this manual. Do not operate the equipment until you have read all safety and operating instructions.

 wami

The MTD062-MB/MTD262-MB human presence sensor must be installed and debugged by the manufacturer or its authorized agent, otherwise it may endanger personal safety and cause MTD062-MB/MTD262-MB human presence sensor failure. The MTD062-MB/ MTD262-MB human sensor damage caused by this is not covered by the warranty.

2. It is strictly prohibited to install or dismantle equipment with electricity.
3. It is strictly prohibited to place the MTD062-MB/MTD262-MB human presence sensor in fire to avoid explosion and endanger personal safety.
4. It is strictly prohibited to dismantle and repair without authorization.


be

1. The standard model MTD062-MB/MTD262-MB has an external control signal for the human body sensor. Before operation, it must be carried out under power-off conditions and must be operated by professionals. Unauthorized operation is prohibited.

2. The usage environment and storage methods have a certain impact on the service life and reliability of the MTD062-MB/MTD262-MB human presence sensor. Avoid long-term use of the MTD062-MB/MTD262-MB human presence sensor in the following working environments:

- High temperature, low temperature or humid places beyond the technical s
- pecifications of this product Places with conductive dust, corrosive gases,
- salt spray, or flammable gases Places with vibration and susceptibility to impact
- Places close to heat sources or with strong electromagnetic field interference

3. Liquids or other foreign objects are not allowed to enter the MTD062-MB/MTD262-MB human presence sensor.

4. If the equipment or its surroundings catch fire, first cut off the power supply; Dry powder fire extinguishers must be used to extinguish the fire, and using liquid fire extinguishers may pose a risk of electric shock.

5. If left unused for a long time, the MTD062-MB/MTD262-MB human presence sensor must be stored in a dry environment. The storage temperature and humidity range of the standard model MTD062-MB/MTD262-MB human presence sensor is -20 ℃~+65 ℃, 40~60% RH.

Precautions for use


Please read and understand carefully before use

1. It is prohibited to use the MTD062-MB/MTD262-MB human presence sensor in elevators, metal panel rooms (less than 6m x 6m space), metal sealed toilets, and similar all metal sealed spaces; Not recommended for use in scenarios where the surface area of metal decorative materials outside the ceiling exceeds 20%. The above scenarios and sensor characteristics do not match, which can lead to abnormal usage.

2. It is prohibited to install MTD062-MB/MTD262-MB human presence sensors, routers, or other high-power WIFI devices close to each other. Please refer to section 5.4 for specific installation spacing requirements.

3. When deploying densely in large spaces, please strictly follow the spacing requirements for deployment. Please refer to section 5.4 for installation principles.

catalogue

Copyright Notice 2
Declaration 2
Safety precautions 3
1. Product Parameters 6
2. Interface size 9
2.1 Interface 9
2.2 Size 9
2.3 Wiring 9
3. Product installation 10
3.1 Installation Method 1: Embedded Installation 10
3.2 Installation Method 2: Bracket Installation 11
4. Product usage 11
4.1 Output signal connected to user system 11
4.2 Sensor power supply 11
4.3 Use remote control to configure parameter 12
4.4 Recommended parameter configurations for different scenarios 12
4.5 Installation principle 13
4.6 Common sources of interference and solutions 13
5. Common Problems and Solutions 15
6. Special Instructions for Sensors 15
7. Remote control setting parameters 17

1. Product parameters

1.1 main parameter

Product model		5.8GHz/24GH MTD062-MB/MTD262-MB
Parameter items		describe
Physical parameters	Product size	The maximum diameter of the outer edge is 50mm, the height is 37mm, and there is a circular hole with an opening of 40-42mm
	colour	Ceramic White
	weight	≤40g
Induction parameters	Beam angle	120 × 120 °, the angle at which the signal energy decays by 6 dB (75% attenuation) relative to 0 ° in front
	Top mounted: detecting radius	• Respiratory detection radius: 2.5-3 meters • Micro motion detection radius: 3-4 meters • Motion detection radius: 4-5.5m
	Top mounted: installation height	Typical height: 2.7-3.5m
	sensitivity	1～9； Minimum sensitivity 1, maximum sensitivity 9; Default 7 notes: The larger the value, the more sensitive it is. Sensitivity within 6 can only be used for motion detection, while sensitivity between 7-9 can be used for respiratory detection, indicating reliability It is related to the "delay from manned to unmanned" (refer to the recommended parameter configuration for different scenarios for corresponding settings).
	Detection distance	1.2～10m； Default detection distance of 6m notes: 1. Detection distance refers to the farthest distance from the sensor to the straight line that can detect motion, micro motion, and breathing targets, which is not mapped to the ground The maximum diameter or radius. 2. The distance is not an absolute distance, and the sensor detection has a distance resolution of about 1m. If set to 3m, at 3m position ± Triggering within a 1m interval is considered normal. 3. The distance value is mainly used for filtering glass partitions, gypsum boards, and wooden partitions, and is not strictly divided into detection areas When using a grid, if set to 3m, there may also be missed alarms or false touches within ± 0.5m of the 3m position.
	Departure delay (From someone to no one)	2～64800s； Default 15 seconds; Practical usage recommendation is 15-180 seconds. If it is too small, it is easy to miss the report, and if it is too large, it will affect the experience notes: This delay represents: 1. the time when the sensor triggers the person to leave and become unmanned; 2. The sensor triggers within the delay time, continue Delay accordingly. 3. The observation window of the sensor, the longer the delay, the lower the probability of sensor false positives, and the respiratory detection delay should not be less than 60 seconds.
	Admission filtering time (No one to someone)	0~0.5s； Default 0 05s； Step setting: 0.05s The longer the setting time, the slower the sensor response and the less likely it is to trigger incorrectly; The time setting is short and the response is fast, but the probability of error increases. In practical use, it is recommended to set the sensor response time to no more than 0.25s, as a response time greater than 0.25s is considered slow. Note: The main function is to solve the following interferences: 1. False triggering caused by

			The detection value is not the absolute value of environmental lighting, which is limited by factors such as installation direction and lighting angle, and can only roughly reflect the trend of environmental brightness.
		Linkage control	Support light sensing linkage control and dynamic configuration of linkage parameters
system parameter	microwave	working frequency	5.8 GHz ± 75 MHz, ISM band
		Transmitting power (Pt)	3～5 dBm
		Modulation mode	FMCW, CW
Working conditions		working voltage	DC9-28V, typical 12V
		Working power	＜1 W
		working temperature	-5℃~+50℃
		Storage temperature	-20℃～65 ℃
		Working humidity	5-90% RH (no condensation)
		Working altitude	0-2800m
		Protection level	IP20
output		Output method	Relay output; Voltage ≤ 30V, current ≤ 2A
other		Installation requirements	Installation height: 2.7-3.5m; Installation method: Embedded; Hole size: circular hole with a diameter of 40-42 mm
		Input terminal	Wire harness connection, with a built-in 0.1m wire harness. It is recommended to use terminal blocks for extension
		Restricted usage scenarios	Inside elevators, metal panel rooms (less than 6m x 6m space), metal sealed toilets, and similar all metal sealed spaces; Scenarios where the planar area of metal decorative materials outside the suspended ceiling exceeds 20%

1.2 Product factory default settings

Serial number	Parameter items	Value/Status
one	Detection distance	6m
two	Detecting shielding distance	0.6m
three	Admission filtering time	0.05s
four	Departure delay time	30s
five	Entry sensitivity	seven
six	sensitivity	seven
seven	Entrance distance reduction	0.6m
eight	Light threshold	0: Close

1.3 Detection range: Top mounted

The following is a rough schematic diagram of the detectable area of the sensor when installed on top.

(1) Existence "(standing still, squatting still, sitting still, sleeping);

(2) Micro motion detection area: capable of detecting micro movements (such as tilting the head, waving, raising the hand, getting up, flipping through books, and shaking the body back and forth);

(3) Exercise "(walking, jogging, running, spinning, jumping, etc.);

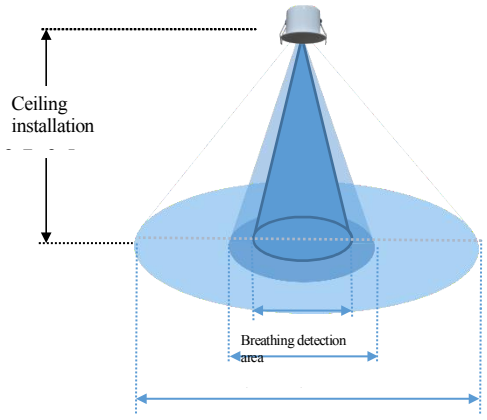

Motion detection area

5.8G radar module
Detection coverage range (related to installation height and sensitivity parameters):

- Detection radius during top installation: 2.5-3 meters for human respiration
- Detection radius during top installation: 3-4 meters for human body micro movements
- Detection radius during top installation: 4-5.5 meters for human motion

Note: 1. The above range values are based on the conference room scene with a top mounted height of 3m and a length and width of 10x10m. Parameter configurations include sensitivity of 7-9, a delay of 60s from manned to unmanned, and a detection distance of 9m. There may be some differences in

different scenarios.

2. The detectable radius is related to many factors such as installation environment, human body shape, relative angle, and micro motion/movement amplitude. The above parameters are the test results of our testing personnel using sensors. The description of micro motion and movement is qualitative, not quantitative, and is for reference only. Under different testing conditions, please refer to the actual measurement for accuracy.

2. Interface size

2.1 Interface

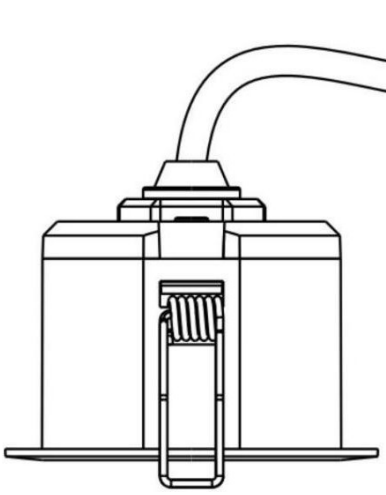

序号	颜色	功能
1	红色	电源正极
2	黑色	电源负极
3	白色	S1
4	绿色	S2

2.2 size

The MTD062-MB/MTD262-MB sensor adopts an embedded ceiling installation method, with an outer edge of 50mm; The dimensions of the embedded ceiling are: diameter x height=40 x 35mm.

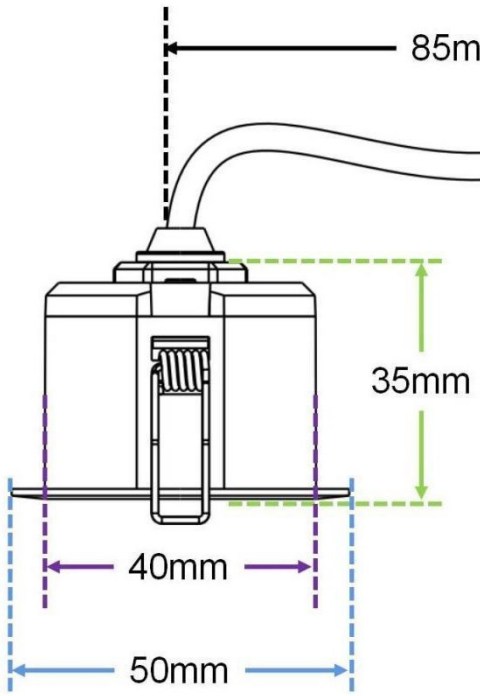

Tip: During installation, it is recommended to open a circular ~~hole with a diameter of 40-42mm~~ on the ceiling

2.3 connection

Connect the external power and signal wires to the sensor's built-in wiring harness and lead them

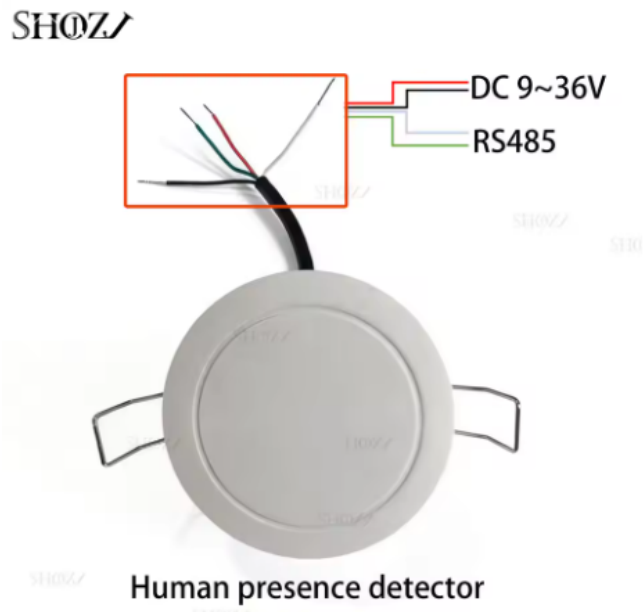

into the ceiling opening.

3. Product installation

3.1 Installation Method 1: Embedded Installation

1. Select a suitable installation location on the ceiling based on the range and shape of the area to be detected, ensuring that the detection area can be effectively covered.
2. The edge diameter of the equipment is 50mm, and the embedded part is 40 * 35mm (cylindrical). A circular hole with a diameter of 40-42mm can be opened on the ceiling, and the minimum reserved space at the top is not less than 50mm.
3. Clamp the power and signal wires onto the device (gently clamp the wires, otherwise the wires are prone to breakage) and introduce them into the ceiling opening.
4. Insert the device into the ceiling hole to complete the installation.

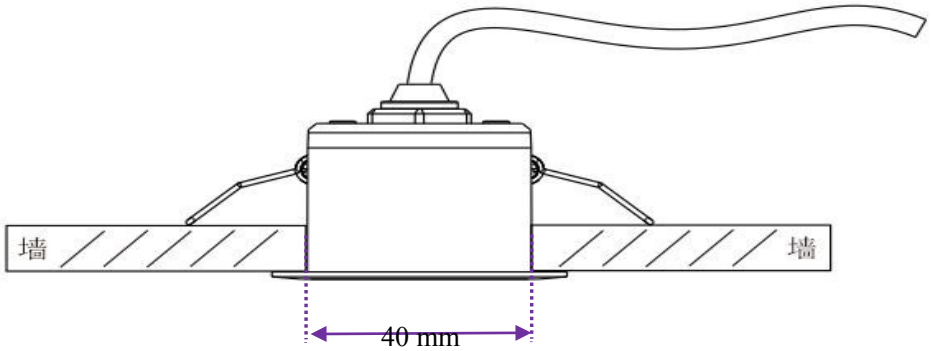

installation
diagram

3.2 Installation Method 2: Bracket Installation

1. Select a suitable installation location on the wall based on the range and shape of the area to be detected, ensuring that the detection area can be effectively covered.
2. Fix the sensor on the mounting bracket, and according to the installation angle of the sensor, make wire harness holes and bracket fixing holes on the wall. The wire harness holes are circular holes with a diameter of 8mm.
3. The fixed hole diameter of the equipment installation bracket is 5mm, and a circular hole with a diameter of 5mm can be opened on the wall. The bracket is fixed with matching expansion screws, and the minimum reserved space at the top is not less than 50mm.
4. Insert the power and signal wires into the bracket openings and clip them onto the reserved wiring harness of the equipment (gently clip the wires, otherwise the wires are prone to breakage),

   Complete

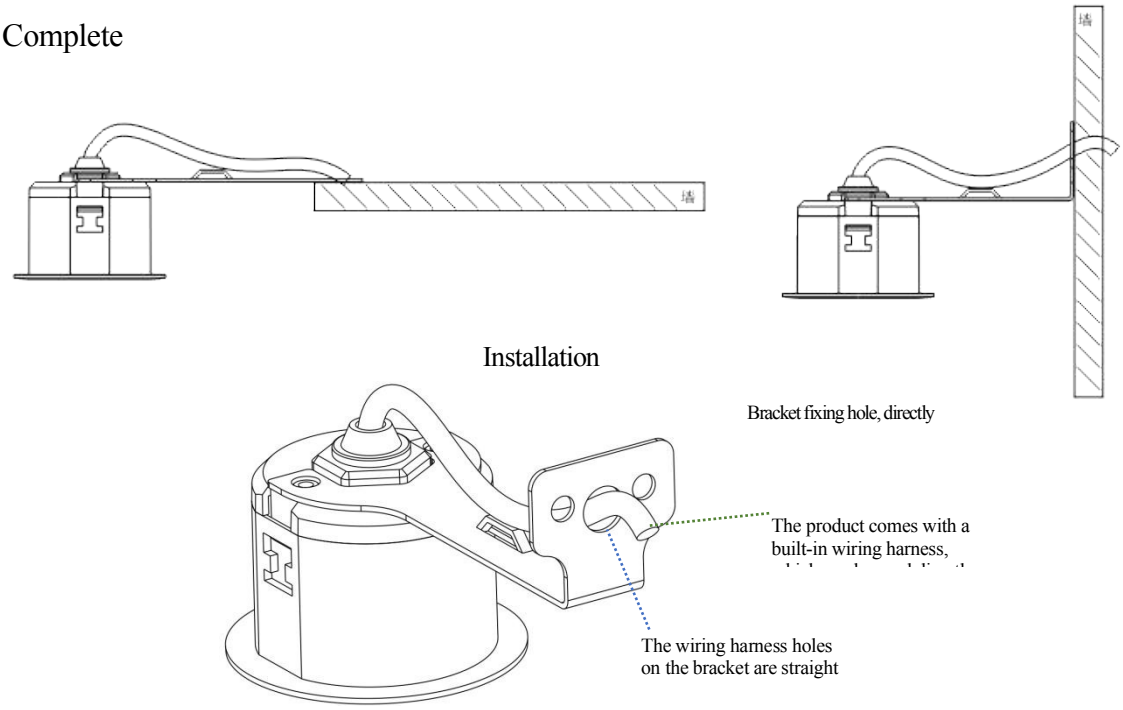

Installation dimension identification diagram

4. Product usage

4.1 Output signal connected to user system

Connect the dry contact outputs S1 and S2 terminals of the sensor to the user system; Choose the appropriate access plan based on the specific situation:

(1) Four wire fully isolated access method:

S1 and S2 terminals have no electrical connection with the sensor. When the presence of a human body is detected, the S1 and S2 terminals are connected; Otherwise, the S1 and S2 terminals will be disconnected;

4.2 Sensor power supply

Provide a DC power supply of 9-28V for the sensor; DC power supply can be centrally powered by

switch mode power supply or separately powered by power adapter.

4.3 Configure parameters using remote control

Use a remote control to configure the parameters of the MTD062-MB/MTD262-MB sensor for easy on-site installation, debugging, and maintenance management.

(1) Configure parameters for "detection distance", "sensitivity", "delay time", and "light intensity";

Tip: Refer to the "Remote Control Setting Parameters" section in Chapter 7

4.4 Recommended parameter configuration for different scenarios

scene	Scenario requirements	Installation requirements	Parameter configuration suggestions	remarks
Entrance/hallway changing room	Micro motion detection motion detection	1. Regional Center	1. Sensitivity: 1~9; 2. Detection distance: (1) Family foyer 2.5-3.5m; (2) Public areas ranging from 3.5 to 9 meters; 3. Someone has a delay of more than 20 seconds when there is no one present.	1. Under normal circumstances, personnel in the entrance hall, hallway, and changing room stay for a relatively short period of time and have a noticeable range of movement. In actual scenarios, only movement triggers are needed to meet the needs. For special needs such as staying for a long time or having conversation scenes in public areas, increasing sensitivity and extending the "someone to no one delay" can be sufficient.
kitchen	Respiratory detection, micro motion detection, motion detection	1. Kitchen: In the center of the kitchen, away from exhaust fans, glass doors and windows, etc	1. Sensitivity: 6-9; 2. Detection range of 2.5-4m; 3. There is a delay of more than 30 seconds when there is no one present.	1. There are relatively few scenes in the kitchen where personnel are completely stationary, and the delay time for "someone to no one" can be set slightly shorter
Home bathroom toilet	Respiratory detection, micro motion detection, motion detection	1. Bathroom and toilet: stay away from doors and windows, and away from exhaust fans; Toilet/squat top front 0.4-0.6m, comprehensive evaluation.	1. Sensitivity: 7-9; 2. Detection range of 2.5-3.5m; 3. Someone has a delay of more than 60 seconds when there is no one present.	1. This type of scene generally has a small area, and personnel may be in a stationary state for a long time. It is necessary to achieve respiratory detection, set high sensitivity, and pay special attention to the glass door when setting the detection distance.
Living room, dining room, conference room	Respiratory detection, micro motion detection, motion detection	1. Living room: in front of the sofa Position 0.5-1m 2. Restaurant: Central position of dining table 3. Meeting room: on the central axis of the long side of the conference table	1. Sensitivity: 7-9; 2. Detection distance of 4-9m; 3. Someone has a delay of more than 60 seconds when there is no one present.	1. The living room and conference room scenes have relatively large area, and there are situations where people sit or lie completely still. Therefore, sensitivity and distance need to be set at high values. 2. The restaurant scene varies in size, but in reality, it overlaps with the living room or open kitchen, and a suitable distance needs to be set to achieve a better experience.

Bedroom Study	Respiratory detection, micro motion detection, motion detection	1. Bedroom: within the bed area 2. Study Room: In front of and behind the desk Within 0.6-1.5m	1. Sensitivity: 8-9; 2. Detection range 5.5-9m; 3. Someone has a delay of more than 180 seconds when there is no one present.	1. In the bedroom scenario, users spend most of their time sleeping, reading, and resting, with less exercise; The requirements for respiratory detection are relatively high, and such scenarios require high sensitivity and a long delay from manned to unmanned in order to prevent sensor false alarms. 2. In the study setting: People are in a stationary or micro motion state for a long time, such as reading or working, and they also need to detect their breath to determine their presence. High sensitivity is required, and the distance setting is based on the actual scene area and potential interference sources.

Please refer to the table above for scene parameter settings, otherwise the optimal sensor performance will not be achieved!

4.5 Installation principles

(1) Entrance/hallway, dressing room scene: centered and securely fixed.

(2) Kitchen scene: centered and securely fixed. If the installation area is rectangular and there is a glass door on the long side, and the installation position in the center is directly opposite to the glass door position, the position needs to be re selected. At this time, the sensor can be installed on the solid wall edge of the door opening side to solve the problem of door penetration. Setting the appropriate distance does not affect the experience.

(3) Home bathroom and toilet scenes: away from doors and windows, away from exhaust fans; The front of the toilet/squatting position should be 0.4-0.6m, taking into account the detection distance set to cover the entire scene space; Microwave signals can penetrate glass or wooden doors, and the problem of door penetration can be solved by installing sensors on the solid wall side of the door opening. Actual positioning requires comprehensive on-site evaluation.

(4) Living room/dining room/conference room scene: Living room: 0.5-1m in front of the sofa; Restaurant: located at the center of the dining table; Conference Room: On the central axis of the long side of the conference table.

(5) Bedroom and study scene: Bedroom: the area directly above the bed; Study: Within 0.6-1.5m in front and behind the desk.

(6) Other types of scenarios

ⓞ Narrow and irregular area scenes: The long side of narrow and irregular areas (with a length of less than 10m) can be installed in the center with solid walls on both sides; If one of the long sides is a glass partition or gypsum board partition, and the long side is less than 1.3 times the short side, you can choose

Choose a solid wall to measure the center point for installation. If it is greater than 1.3 times, install 2 sensors in sections to cover the center; If both sides are glass partitions or gypsum board partitions, two sensors need to be centered and covered; The long and remote areas of narrow and elongated regions are larger than the coverage area of sensors, and it is necessary to divide the areas and follow the above principles.

ⓣ Glass and gypsum board partitions: Keep away from glass and partitions, and in such scenarios, try to measure as close to solid walls as possible while ensuring that the sensor can cover the breathing area that needs to be covered. If the surrounding area is surrounded by glass and partitions installed in the center, and appropriate detection distance, retraction distance, and trigger sensitivity are set to solve the problem of detection outside the glass and walls.

ⓣⓗ Sitting, squatting, and standing still: The sensor is mounted on the top of the head, 0.4-0.8m in front of the head. It is not advisable to directly install it on the top of the head.

ⓕⓞ Intensive deployment scenario: During intensive deployment, the distance between sensors in straight lines should not be less than 2m.

4.6 Common sources of interference and solutions

(1) Fan: Shaking fan (blade diameter greater than 10cm), metal blade fan without shaking, ceiling fan.

A fan with blades larger than 10cm that shakes its head can continuously output a manned state from the sensor that triggers the manned state within the respiratory detection range; A metal fan blade that does not shake its head will trigger or maintain the sensor's manned state output during operation; Plastic fan blades that do not shake their heads can be filtered by sensors in areas outside of breath detection. Setting appropriate trigger sensitivity can effectively avoid interference from triggering sensor outputs.

(2) Air conditioning: air deflectors for hanging and cabinet units, metal ornaments for air conditioning blowing, thick curtains for air conditioning blowing, suspended ceiling vibrations driven by ceiling mounted air conditioning, and louver vibrations for central air conditioning blowing.

The wind swing and louver vibration of the air conditioner can trigger or maintain the sensor in a manned state within the sensor's breathing coverage range; The large amplitude of the green plants blown by the air conditioner can also trigger or maintain the sensor's manned state. Setting appropriate trigger sensitivity and trigger indentation can avoid most false triggers; But it cannot completely solve the problem of interference causing the sensor to continuously output a human status after the person leaves.

(3) Curtains: curtains that sway significantly, roller blinds with aluminum alloy lower rails.

Curtains made of fabric, cotton, or sand that swing slightly in ordinary households are not easily triggered by sensors; If the roller blind with aluminum alloy lower rail swings within the detection distance range, it is easy to trigger the sensor. By setting an appropriate detection distance and filtering out such interference, it is possible to effectively avoid false triggering caused by the above scenarios.

(4) Exhaust fan: Ceiling vibration caused by metal fan blades and exhaust fans. If the front of the sensor does not have a diameter and the fan blade sensor cannot be triggered, the suspended ceiling vibration caused by the exhaust fan will drive the sensor to vibrate or the vibrating surface detected by the sensor will be triggered.

Avoid exhaust fans or vibrating surfaces within the detection range of sensors; Fix the exhaust fan properly to avoid causing vibration in the ceiling.

(5) Strong **5.8GHz WiFi** signal interference: There is a 5.8GHz WiFi router/AP within 3m of the front area of the sensor; There is a 5.8GHz WiFi router/AP located within 1.5m horizontally or on the back of the sensor.

Suggest installing WiFi routers in the front area of the sensor at a distance of at least 3m from the sensor; Routers in other directions should be installed at a distance of at least 1.5m from the sensor; When using a top mounted AP, maintain a distance of at least 1.5m between the AP and the sensor.

(6) Airflow (wind)**:** The movement, drifting, vibration, etc. of objects in the scene caused by blowing may trigger.

Setting appropriate trigger sensitivity can filter wind and grass movements below 2-3 levels, and the higher the wind level, the more likely it is to trigger incorrectly.

(7) Animals: cats, dogs, mice, other pets, etc. The difference between other animal species and human characteristics lies in their body size, such as the triggering mechanism being the same as that of humans.

Set appropriate trigger sensitivity and trigger indentation distance, most cats, dogs, and mice cannot trigger the sensor. The sensor can also be triggered by the significant swinging of curtains caused by cats and dogs, or the dragging of clothes, bed sheets, duvet covers, and the movement of objects.

(8) Low frequency vibration: wall or ceiling vibration caused by loud sound, vibration caused by decoration upstairs and downstairs, etc.

When installing, it is necessary to maintain a suitable distance from the audio system to avoid

radar signals directly shining on the main audio system. When selecting the installation position, the main consideration is to cover areas where people are stationary, such as sofas, seats, etc. Set relatively low sensitivity (to avoid false triggering) and longer 'manned to unmanned delay' to achieve more reliable detection.

5. Common problems and solutions

common problem	Cause analysis	resolvent
After connecting the power supply, the sensor indicator light No response	1. Is the power supply normal and meets the working voltage of the sensor?	Check if the power supply meets the working voltage of the sensor
	2. Is the indicator light damaged?	Contact after-sales personnel and return to the factory for repair
In the presence of someone, the sensor cannot detect their presence	Is the detection area set too small?	Reset the matching detection area based on the scenario
	Is the sensitivity setting too small?	Adjust the corresponding sensitivity according to the scene
	3. Is the sensor installed properly?	Ensure that the sensor is installed properly and unobstructed
	4. Is the delay time set too short?	Ensure a delay time of 30 seconds or more
In an unmanned state, the sensor detects the presence of someone	Is there any interference source in the environment?	Eliminate interference sources in the environment
	Is the detection area too large?	Reset the matching detection area based on the scenario
	Is the sensitivity setting too high?	Adjust the corresponding sensitivity according to the scene

6. Special instructions for sensors

Due to the characteristics of microwave technology, ideal detection results may not occur in certain application scenarios or may only be obtained under suitable conditions.

The MTD062-MB/MTD262-MB sensor is a high-performance sensor that can detect subtle changes that are not visible to the human eye. If you encounter performance that deviates from expectations during testing, please contact us for detailed technical support to avoid parameter settings errors that may affect usage and prevent the sensor from performing at its best.

The default configuration parameters of the MTD062-MB/MTD262-MB sensor may not be suitable for all users' actual scenarios. Please be sure to reconfigure the sensor

1. Detection technology: respiratory level weak motion detection technology:

(1) The current version of the sensor can detect targets with fluctuations as low as 1 mm or speeds as low as 3 mm/s, while most human respiratory movements and body micro movements have fluctuations far greater than 1 mm or speeds greater than 3 mm/s, making it highly sensitive to identify the presence of a human body;

(2) From a usage perspective, it can be understood as a motion detection with higher sensitivity but lower false alarm rate, and can stably and reliably detect weak fluctuations such as breathing.

2. Limitations of "Weak Motion Detection Technology":

(1) Trembling air conditioners, fans, washing machines; Shaking curtains and green plants; Shaking large metal equipment, ventilation ducts, fire pipes, and drainage pipes; If the motion frequency or harmonic frequency of objects such as vibrations that are not visible to the human eye fall within the range of human respiratory frequency, they may be observed by sensors and mistaken for the presence of a human body;

(2) To eliminate interference from shaking or shaking objects, the farthest detection distance can be set to exclude interfering objects from the detection area; It is also possible to adjust the installation position so that the beam cannot directly or indirectly illuminate the interfering object after multiple reflections. Alternatively, when there are fixed sources of interference that cannot be resolved by the universal version sensor, customized interference algorithms can be used to filter out interfering substances (such as electric fans, air conditioners, bathroom heaters, etc.).

3. Need for relative motion:

(1) Due to the highest sensitivity, farthest detection distance, and easier detection of targets in radial motion (relative motion) by sensors. Therefore, the best installation method is: horizontal installation>inclined downward installation>top installation; However, when using the detection function, it is recommended to install it on top, as there may be certain detection blind spots when installed horizontally or diagonally downwards.

(2) The best relative motion during top installation is upward and downward movement; Secondly, there are motion components in the up and down directions;

(3) When mounted on top, the beam is obliquely directed towards the body at a certain distance from the sensor. The horizontal movement of the body will have some motion components in the up and down directions, so it can detect the presence of a person;

(4) When installed on top, sit directly below the sensor without shaking your body, only breathing. As breathing is a horizontal movement without any vertical motion components, the sensor will not be able to detect the presence of someone. In this case, the delay time of the sensor is generally extended, so that the probability of the human body not moving at all directly below the sensor during a longer observation time becomes smaller, and the probability of detecting the presence of the human body will increase, reducing the false alarm rate;

(5) When installed horizontally: only shining on the feet, it will not detect the presence of people.

4. Sensor angle

(1) Electromagnetic waves are like a beam of flashlight light, with energy beyond the edge. Although there is light near the edge, it is relatively weak. For a sensor with a 120 × 120 ° angle, 120 ° represents the antenna radiation angle, which is the angle measured when the signal energy decays by 6 dB (0.25 times) relative to the front direction at 0 ° . It is not the detection angle that can detect the target, and the central cross-section of the detection area is not like a triangular detection surface with an opening of 120 ° .

(2) The size and distance of the detection area are related to the volume, relative angle, and motion speed of the detected target. For horizontal installation: the larger the target volume, the easier it is to detect; The smaller the relative angle (such as forward relative motion), the easier it is to detect.

5. Signal enhancement:

Due to the multipath propagation effect of microwave signals, in a closed and obstructed environment,

the reflected signal will be enhanced, thereby improving the detection performance of the sensor. If the same configuration parameters are set, the detection effect will be better in a small bathroom than in a large conference room; Small rooms have better detection effects than halls, and so on.

7. Remote control setting parameters

The dry contact version of the sensor also supports remote control configuration parameters, making it convenient for distribution network, on-site installation, debugging, and maintenance management

7.1 Remote Control Instructions

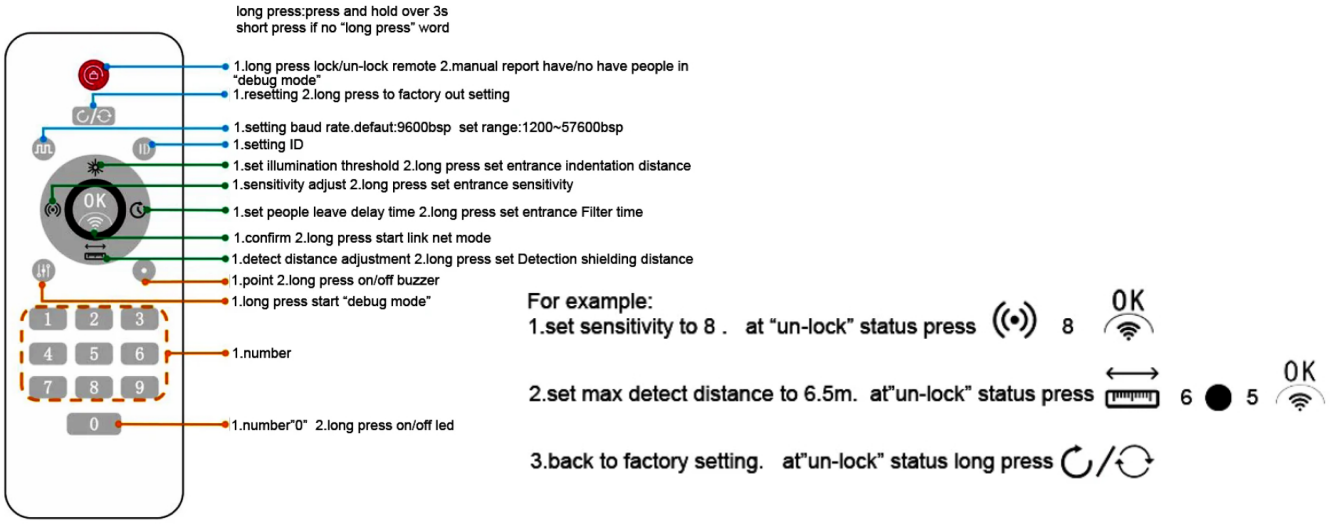

7.2 Additional explanation of function keys

(1) 【🔓】 Key: Long press to unlock/lock the remote control;

Long press to unlock/lock remote control: The sensor defaults to the "unlocked" state at the factory, and users can directly use the remote control

Device operation. During normal use, if the sensor encounters remote control interference from other appliances, long press to lock the sensor and prohibit remote control operation.

(2) 【↻/⟳】 Key: Long press to restore factory settings; Short press reset

ⓞ Long press to restore factory settings: Restore sensor parameters to default state: sensitivity 7, detection distance 6 meters, delay time 15 seconds, etc.

ⓣ Short press reset: used to restart the controller (MCU). Password 123 is required, otherwise restarting will be invalid.

(3) 【☼】 key: Short press to set the lighting threshold; Long press to set the entrance distance to be indented.

ⓞ Short press to set the lighting threshold: When the device is running in local mode (automatic), it can be combined with the lighting threshold to

Auto-Control. When the actual lighting value is lower than the set threshold and someone is detected, the device circuit breaker will conduct (output normally open); If no one is detected, the device circuit breaker will disconnect (output normally open). The configurable light sensitivity range is 0~255.00 Lux.

ⓣ Long press to set the entrance distance indentation: Based on the detection distance, the distance is indented inward. Mainly to avoid false triggering caused by distance edge

interference. If the detection distance is 5 meters and the indentation is 0.5 meters, then the initial triggering distance is
4.5 meters), with a value range of 0-10.00m (default value of 0.6 meters).

(4) 【 】 key: Short press to set sensitivity; Long press to set the entry sensitivity.

ⓞ Short press to set sensitivity: the detection threshold for the strength of object energy when the device is working. The higher the sensitivity, the weaker the detection energy intensity, and the lower the sensitivity, the stronger the detection energy intensity. The value range is 1-9 (default 7).

ⓣ Long press to set the entrance sensitivity: the sensitivity threshold triggered for the first time when the target enters the detection range, mainly used to filter out false touch interference. The value range is 1-7 (default 5).

(5) 【 】 key: Short press to set departure delay; Long press to set the entry filtering time; Short press to set detection lock time in debugging mode

ⓞ Short press to set departure delay: used to configure the confirmation time after the "target disappears". The larger the parameter configuration, the more accommodating it is

Easy to reduce missed reports caused by accidental disappearance of targets; But if the time is too long, the device needs more time to report that the target has disappeared. The default value is 30 seconds, with a range of 0 to 64800 seconds.

ⓣ Long press to set the entry filtering time: used for the target confirmation time after detecting the target. The default value is 0.05 seconds,

take

The value range is 0-0.5 seconds.

(6) 【OK】 key: Short press to confirm the parameter takes effect;

ⓞ Short press to confirm the parameter takes effect: After pressing the 【 】, 【 】, 【 】, 【 】 keys on the remote control, enter the parameter value, and finally short press the 【OK】 key for the sensor to store and use the new parameter value. Otherwise, it will not be used.

(7) 【 】 key: Short press to set detection distance; Long press to set the detection shielding distance

ⓞ Short press to set detection distance: the farthest distance detected by the device during operation. The configurable value range is 1.2-10m, valid to two decimal places. Excess decimal points and decimal values will be ignored by the sensor.

ⓣ Long press to set the detection shielding distance: the closest distance detected by the device during operation. The value range is 0.3~9m (its value must be less than the "detection distance", default is 6 meters).

(8) 【 ● 】 key: Short press to enter decimal point;

ⓞ Short press to enter decimal point: Enter the decimal point.

(9) [Number] key: Number key

ⓞ Number keys: Short press to enter numbers 1-9

(10)【 0 】 key: Short press to enter the number "0"; Long press the

ⓞ switch LED indicator light and short press to input the number "0":

ⓣ Long press the switch LED indicator light: The default LED indicator light is off, which means it goes out when working normally and flashes or lights up when abnormal. Press and hold the button to turn on the indicator light (which will still flash when remotely controlled). If someone is detected, the indicator light will remain on. Press and hold again to turn off the function of the indicator light detecting that the person is constantly on.

th

Tips:

(1) After pressing the 【】【】, 【】 or 【】 buttons, if there is no operation within 5 seconds, the sensor will timeout and exit the configuration state;

(2) 【】【Number】 and 【0】 are numeric combination keys used for parameter value input

7.3 Example

(1) Set sensitivity to 8:

Operation steps: In the unlocked state of the remote control, first press the 【】 key briefly to enter the configuration state, then press the number "8" briefly, and finally press the 【OK】 key briefly to take effect.

(2) If the maximum detection distance is set to 6.5 meters:

Operation steps: In the unlocked state of the remote control, first press the 【】 key briefly to enter the configuration state, then press the number "6", press the 【 】 key briefly, press the number "5" briefly, and finally press the 【OK】 key briefly to take effect.

(3) Restore factory configuration:

Press and hold the 【/】 key for at least 2 seconds while the remote control is unlocked.

Tips:

(1) After OK pressing the 【】 button, the sensor will restart. After about 3 seconds, the sensor will execute new parameters and restart detection;

7.4 Parameter query

The dry contact version of the product has the function of parameter query

7.4.1 Parameter query steps

- To check the detection distance, press the 【】 button on the remote control briefly, After seconds, the indicator light of the sensor starts displaying parameters. For example, if the current detection distance is 7m, the blue indicator light of the sensor will flash 7 times every 1 second, and then flash 1 time, indicating 0. So the reading is 70, and the resolution of the detection distance is 0.1, so the reading is 70 * 0.1=7 meters. For example, if the current detection distance is 6.5m, the blue indicator light of the sensor will flash 6 times every 1 second, and then after an interval of 2 seconds, the blue indicator light will flash 5 times every 1 second, indicating 5. So the reading is 65, and then press the 【OK】briefly
- Steps to check sensitivity: Short press the 【】 on the remote control, then short press 【OK】

- Operation steps for querying delay time: Short press the 【 】 on the remote control, then short press 【】, wait for 2 seconds, and the sensor indicator light will start displaying parameters. For example, if the current delay time is 30 seconds, the blue indicator light of the sensor will flash 3 times every 1 second, indicating 3, and then flash 1 time, indicating 0. Therefore, the read value is 30, and the sensitivity resolution is 1. Therefore, the read value is 30 * 1=30. For example, if the current delay time is 25 seconds, the blue indicator light of the sensor will flash twice every 1 second, indicating 2. Then, after an interval of 2 seconds, the blue indicator light will flash five times every 1 second, indicating 5. Therefore, the read value is 25, and the sensitivity resolution is 1. Therefore, the read value is 25 * 1=25.
- Steps for querying the light sensing threshold: Short press the 【 】 on the remote control, then short press 【】, wait for 2 seconds, and the sensor indicator light will start displaying parameters. For example, if the current light sensing threshold is 10Lux, the blue indicator light of the sensor will flash once, indicating 1, and then flash once, indicating 0. Therefore, the read value is 10. The resolution of the light sensing threshold is 1, so the read value is 10 * 1=10Lux. For example, if the current light sensing threshold is 15Lux, the blue indicator light of the sensor will flash once, indicating 1. Then, after an interval of 2 seconds, the blue indicator light will flash 5 times every 1 second, indicating 5. Therefore, the read value is 15. The resolution of the light sensing threshold is 1, so the read value is 15Lux.

Tips:
The resolution for detecting distance is 0.1
The resolution of delay time, sensitivity, and light sensitivity threshold is 1